RoHS Pb Lead-free

■ Specifications :

- Voltage rating: 100V AC / DC
- Current rating: 1A AC / DC
- Withstanding voltage: 500V AC/minute
- Temperature range: -25°C~+85°C
- Insulation resistance:≥500MΩ
- Contact resistance: ≤30mΩ
- After environmental testing: ≤40mΩ

1008 H X-XX X-XXXX
(01) (02)(03)(04)(05)(06)(07)

(01) Series No.
(02) Category:
H-HSG
(03) Welding Board Angle:
Blank-ordinary
(04) Row No.-Pin No.:
XX-Single row
(05) Plug the Pin & special No.
(06) Material:
46-PA46 ; LP-LCP 94V-0
(07) Color:
Blank-natural color

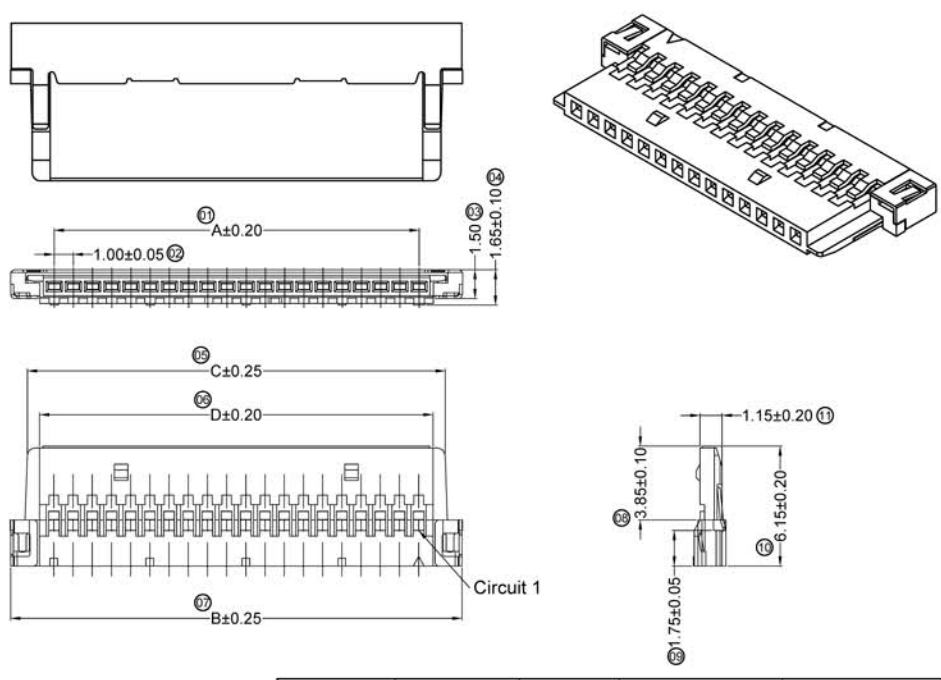

Poles	Dimensions (mm)			
	A	B	C	D
8	7.00	11.50	9.85	8.50
20	19.00	23.50	21.85	20.50
30	29.00	33.50	31.85	30.50

PART N0	Material	Material(Shell)	Suitable SWB Terminal	Mates SWB Wafer	Q'ty/Bag
1008H-XX-LP	LCP UL 94V-0	Stainless Steel	1008T	1008W	1,000Pcs
1008H-XX-46	Nylon 46 UL 94V-0				

DATE	OLD REV	NEW REV	ECN	DESCRIPTION	CHECK	APPROVAL
14-12-08	B	C		Change 9 SIZE	W.X.T	
14-10-21	A	B		Change PIN SIZE	Jova	

GENERAL TOLERANCE
.X ±0.30
.XX ±0.20
.XXX ±0.10
PROJECT

SWB Terminal&Connectors 思索连接器有限公司 SWB CONNECTORS CO.,LTD

APPROVAL	CHECK	DRAWN	DATA
		Allen	2013/08/12

PART NO. 1008H-XX-XX
TITLE 1.00 mm Crimp Style Connectors

UNIT	SCALE	NUMBER	REV
MM	1 : 1	A-045	C

版本REV	繪制日期
A	2009-3-27

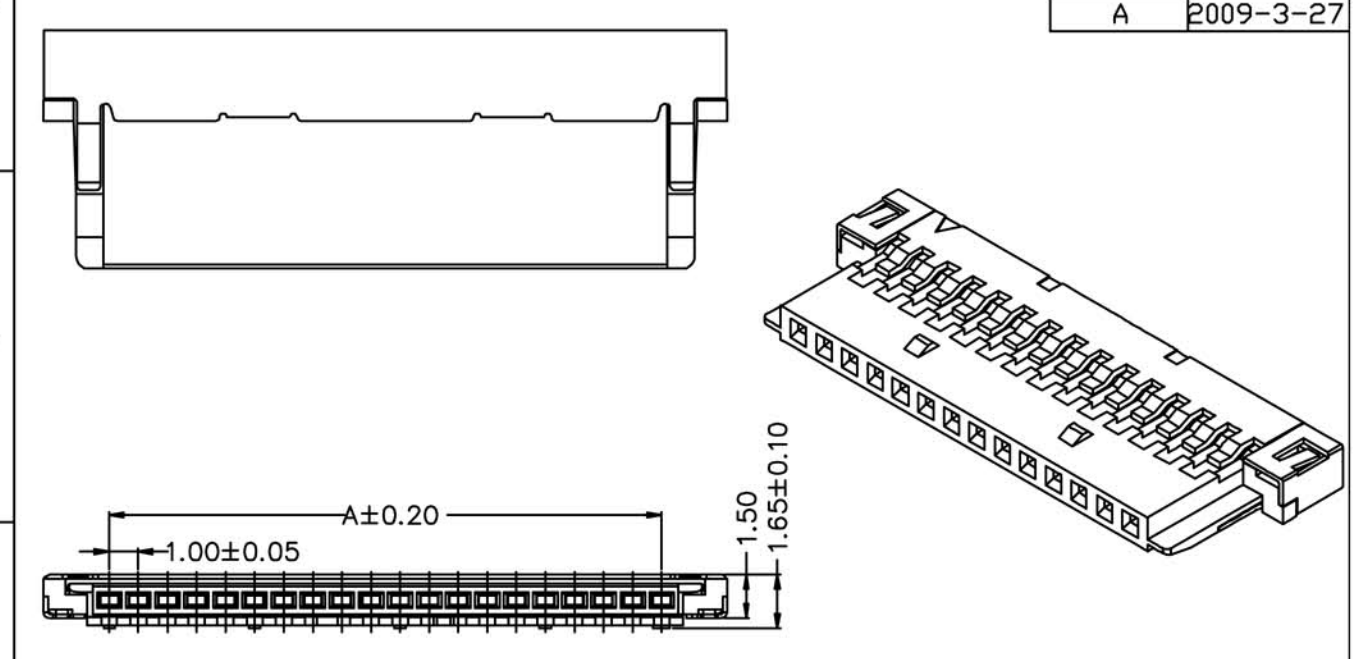

NOTE:
- Material: NYION PA46 94V-0/LCP 94V-0
- Q'tyl: 1000PCS/Bag

Poles	Dimensions (mm)			
	A	B	C	D
8	7.00	11.50	9.85	8.50
20	19.00	23.50	21.85	20.50
30	29.00	33.50	31.85	30.50

一般公差:GENERAL TOLERANCE		更改說明:REV.DESCRIPTION	更改說明:REV.DESCRIPTION
尺寸範圍DIM		1	4
10.01以上之尺寸	±0.30	2	5
10.00以內之尺寸	±0.20	3	6
孔位	±0.10	核准APPD	模型: MODEL / 料號: ITEM NO A1004H-00-NP
文件編號		審核CHD	
SC-EW-11		繪圖DWN LIAOZTING 2009-3-27	
比例: SCALE	SHIH CHUAN ELECTRONICS		規格: SPEC 1.00 mm Crimp Style Connectors

版本REV	繪制日期
A	2009-2-24

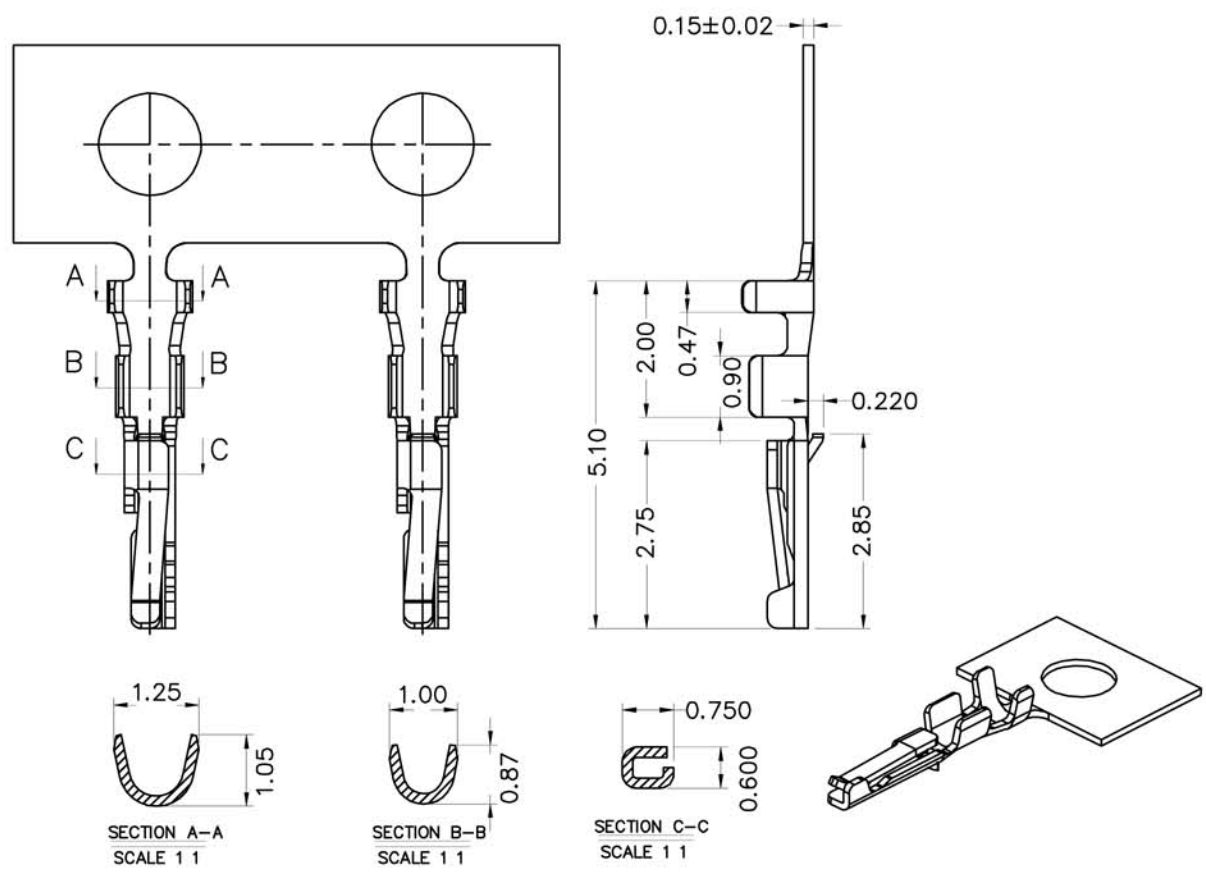

NOTE:
1.THICKNESS: 0.15mm
2.MATERIAL: PHOSPHOR BRONZE
3.FINISH: GOID-PIATED
4.APPLICABLE WIRE: AWG28-32#
5.使用量具為電子卡尺

一般公差:GENERAL TOLERANCE		更改說明:REV.DESCRIPTION	更改說明:REV.DESCRIPTION
尺寸範圍DIM		1	4
.0	±0.20	2	5
.00	±0.15	3	6
.000	±0.10	核准APPD	模型: MODEL / 料號: ITEM NO A1004TOP-00
文件編號		審核CHD	
SC-A-2001T		繪圖DWN LIAO	
比例: SCALE	SHIH CHUAN ELECTRONICS		規格: SPEC 1.00 mm Crimp Style Connectors

版本REV	繪制日期
A	2009-3-27

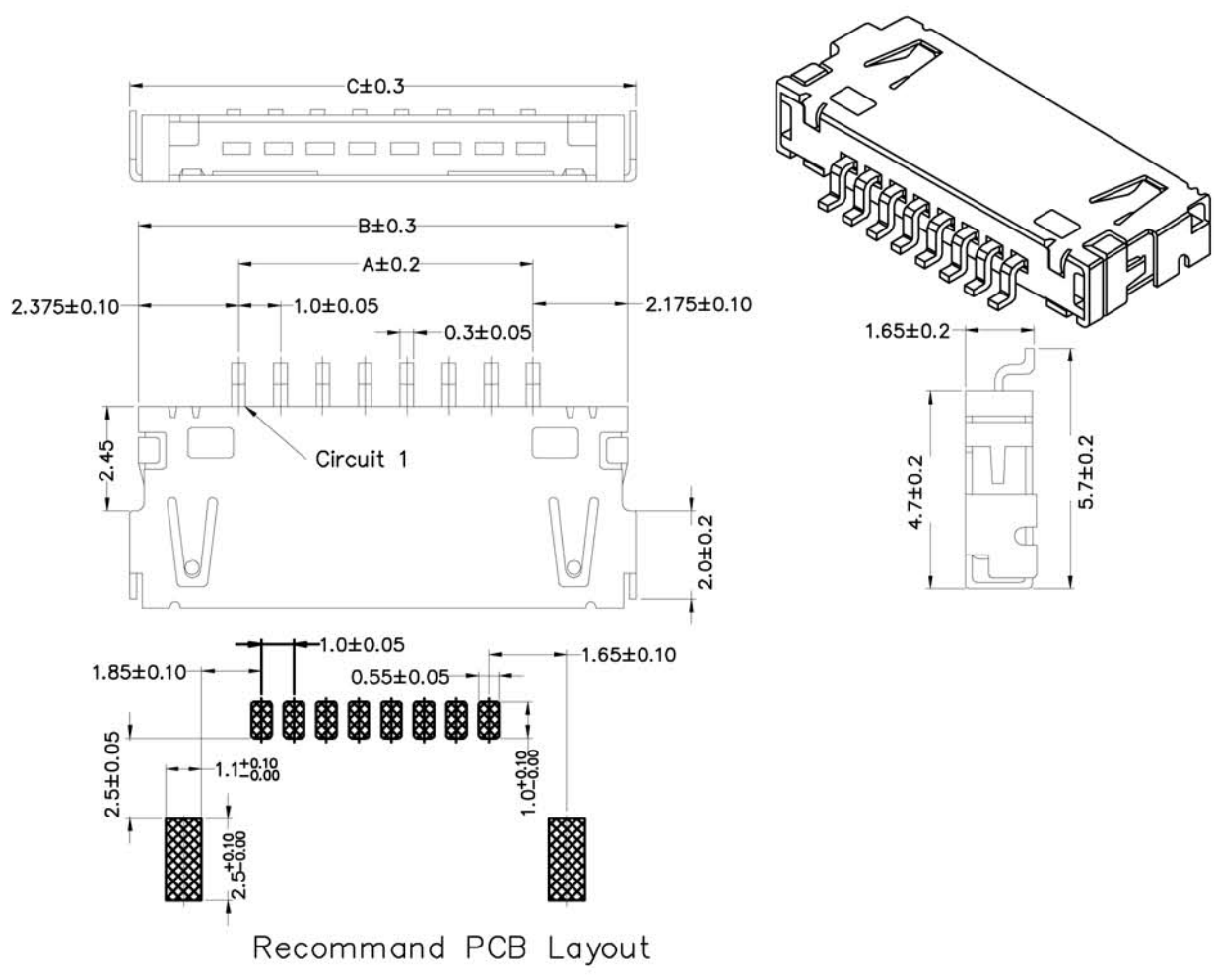

Recommand PCB Layout

NOTE:
- Welding Board Angle: R- Right Angle 90°
- Welding Way: S-SMT
- Plug the Pin & Special No.: HF-Halogen Free
- Material:LCP 94V-0
- Material(Pin): Phosphor Bronze
- Planting Category: V01-Gold Flash
- Color: Blank-natural color

Poles	Dimensions(mm)		
	A	B	C
08	7.00	11.55	11.95
14	13.00	17.55	17.95
20	19.00	23.55	23.95
30	29.00	33.55	33.95

一般公差:GENERAL TOLERANCE		更改說明:REV.DESCRIPTION	更改說明:REV.DESCRIPTION
尺寸範圍DIM		1	4
10.01以上之尺寸	±0.20	2	5
10.00以內之尺寸	±0.15	3	6
孔位	±0.05	核准APPD	模型: MODEL / 料號: ITEM NO A1004W-R-00-NP
文件編號		審核CHD	
SC-EW-11		繪圖DWN LIAOZTING 2009-3-27	
比例: SCALE	SHIH CHUAN ELECTRONICS		規格: SPEC 1.00 mm Crimp Style connectors